Greenhouse gas analyser

- Robust
- Highest uptime
- < 20 ppb N_2O
- Air, water and soil samples

AN 219WA0419C

GAS offers custom configured GC analysers for many application fields since 45 years. GAS analysers are designed to meet many standardised methods from GPA, ASTM, UOP, ISO, EN and others. The efficient configurations are based on proven GC technology, resulting in robust instruments with an optimal return on investment.

Burning of fossil fuels (like coal, oil and natural gas), agriculture and land clearing contribute to increasing levels of greenhouse gases, which affects earth's temperature. GAS offers the greenhouse gas analyser for measuring ppb/ppm to % levels of CO_2, CH_4, N_2O and SF_6.

Figure 1. Greenhouse gas analyser

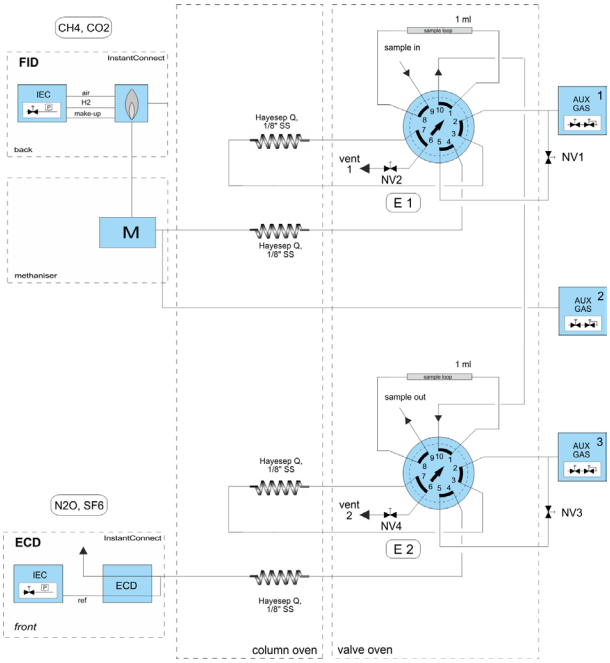

Figure 2. Diagram Greenhouse gas analyser

Greenhouse Gas analyser

The GAS Greenhouse gas analyser is configured with 2 analytical channels. The first channel measures CH_4 and CO_2 using a 10-port valve for injection and backflush, methaniser and FID. The methaniser converts CO_2 to methane, for sub ppm detection by FID. An optional TCD is available placed in series with methaniser-FID for high levels of CO_2.

N_2O is measured by ECD (Electron Capture Detector) on the second channel, after separation from air and CO_2. Water is backflushed to vent. SF_6 can be measured as well on this channel, with sub-ppt level detection limit.

See Figure 2 for schematic diagram.

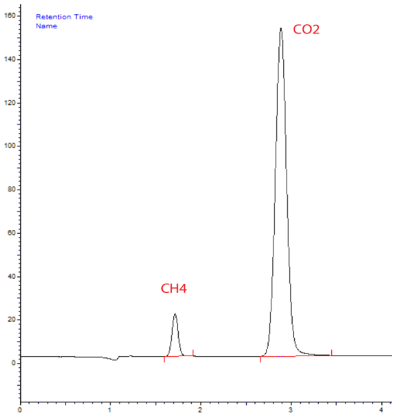

Figure 3. CH_4 and CO_2 using Methaniser/FID detection

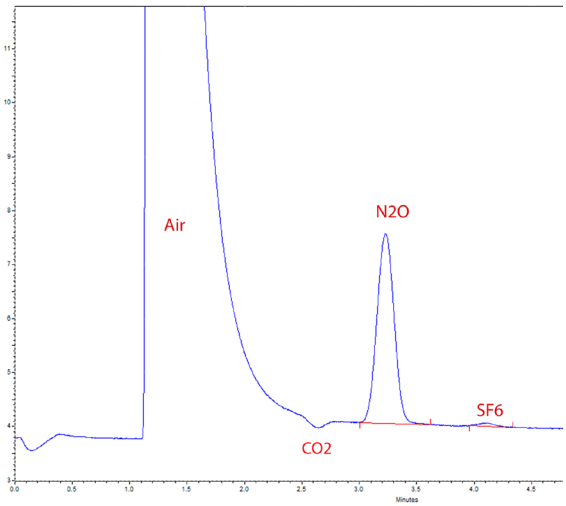

Figure 4. N_2O and SF_6 using ECD detection

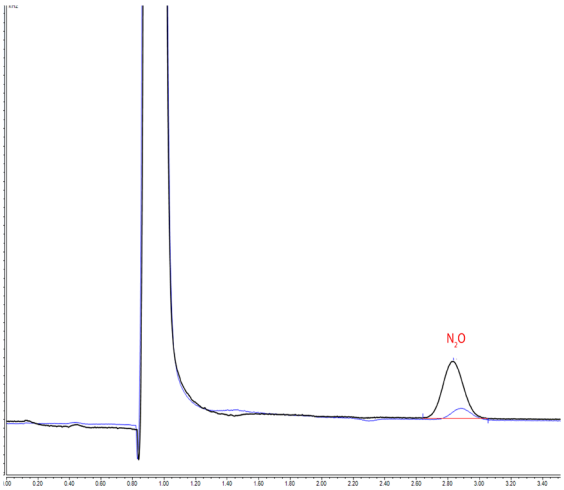

Figure 5. Effect of make-up gas on ECD sensitivity for N_2O.
Blue: N_2 ; black: Ar/CH_4 make-up gas

Options

- Analysis of greenhouse gases in water, soil and organic materials using Headspace sampler Triplus 500 (figure 7).
- Bypass valve in case of high oxygen content.
- TCD in series with Methaniser/FID in case of high CO_2 levels.

Results

Figure 3 shows the chromatogram of the methaniser/FID channel, while figure 4 shows N_2O and SF_6 detection on ECD. The minimum detectability is < 50 ppb for CH_4, < 100 ppb for CO_2 and < 20 ppb for N_2O. SF_6 is analysed in the sub-ppt range.

The Electron Caputure Detector requires a make-up gas for providing electrons that are captured during detection by the component of interest. Nitrogen or Argon/Methane (95:5) are used for this purpose. The best sensitivity is achieved using the latter: LOD < 20 ppb for Ar/CH_4 vs LOD < 100 ppb for N2. See figure 5.

All components are analysed with repeatability < 1 % RSD. Figure 6 shows the statistical results for N_2O at 330 ppb concentration level in air.

TRACE 1300 GC-C...	N2O
Sample ID	Area
niowag_N2O_067	4713403.00
niowag_N2O_068	4695494.00
niowag_N2O_069	4689598.00
niowag_N2O_070	4779851.00
niowag_N2O_071	4731030.00
niowag_N2O_072	4706694.00
niowag_N2O_073	4780556.00
niowag_N2O_074	4778467.00
niowag_N2O_075	4748329.00
niowag_N2O_076	4784289.00
Min:	4689598.00
Max:	4784289.00
Mean:	4740771.10
Std Dev:	38232.97
%RSD:	0.81

Figure 6. Repeatablity (%RSD) of N_2O in air at 330 ppb level.

Figure 7. Triplus 500 Headspace autosamper for analysis of greenhouse gases in water, soil and organic materials

Specifications

Application:	Analysis of greenhouse gases in air, water, soil or organic material samples
Configuration:	Dual channel instrument with Methaniser-FID and ECD detection
Injection:	GSV (Gas Sampling Valve) or Head Space sampler (closed loop injection)
Optional:	Head Space sampling using GSV (closed loop sampling) TCD for high levels of CO_2 Bypass valve in case of high O_2 content
Analytes:	CH_4, CO_2, N_2O, SF_6 ; chlorofluorohydrocarbons on request
Analysis Time:	5 minutes
Minimum Detectability:	CH_4 < 50 ppb CO_2 < 100 ppb N_2O < 20 ppb using Ar/CH_4 as ECD make-up gas < 100 ppb using N_2 as ECD make-up gas SF_6: sub-ppt range
Repeatability:	1% RSD (n=10) or better (N_2O @ 330 ppb; CH_4 @ 2 ppm; CO_2 @ 10 ppm; Gas Sampling Valve)

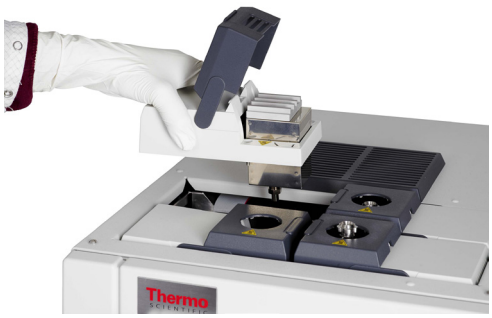

InstantConnect injector and detector modules for easy exchange and high uptime

GLOBAL™ ANALYSER SOLUTIONS G·A·S

MADE IN HOLLAND

GAS is an Interscience company